KOHLER®

GABRIELLE™

COMFORT HEIGHT® TOILET
K-3513
ALSO K-3513-RA

ADA	CSA B651	OBC

Features

- *Vitreous china*
- *Elongated bowl*
- *Comfort Height®*
- *Class Five® flushing system*
- *Available with KOHLER Artist Editions designs*
- *Includes seat, cover, and polished chrome trip lever*
- *Less supply*
- *12″ (30.5 cm) rough-in*
- *1.6 gpf (6 lpf) or 1.4 gpf (5.3 lpf)*
- *2-1/8″ (5.4 cm) glazed trapway*
- *11″ (27.9 cm) x 8-1/2″ (21.6 cm) water area*
- *28-1/4″ (71.8 cm) x 18-1/2″ (47 cm) x 28″ (71.1 cm)*

Codes/Standards Applicable

Specified model meets or exceeds the following:

- *ADA*
- *ICC/ANSI A117.1*
- *CSA B651*
- *OBC*
- *ASME A112.19.2/CSA B45.1*
- *Energy Policy Act of 1992*

Colors/Finishes

- 0: White
- Other: Refer to Price Book for additional colors/finishes

Accessories

- CP: Polished Chrome
- PB: Vibrant® Polished Brass
- Other: Refer to Price Book for additional colors/finishes

Specified Model

Model	Description	Trip Lever	Colors/Finishes	
K-3513	Comfort Height toilet	left-hand	❑ 0	❑ Other_____
K-3513-RA	Comfort Height toilet	right-hand	❑ 0	❑ Other_____

Recommended Accessories					
K-7637	Angle supply with stop		❑ CP	❑ PB	❑ Other_____
K-4650	Lustra™ open front toilet seat – for Accessibility compliance	❑ 0			❑ Other_____

Product Specification

The one-piece elongated bowl toilet shall be made of vitreous china. Toilet shall be 28-1/4″ (71.8 cm) in length, 18-1/2″ (47 cm) in width, and 28″ (71.1 cm) in height. Toilet shall have an 11″ (27.9 cm) x 8-1/2″ (21.6 cm) water area. Toilet shall be Comfort Height. Toilet shall be 12″ (30.5 cm) rough-in with a 2-1/8″ (5.4 cm) glazed trapway. Toilet shall have a Class Five flushing system with a flush rate of 1.6 gpf (6 lpf) or 1.4 gpf (5.31 lpf). Toilet shall include seat, cover, and trip lever. Toilet shall be less supply. Toilet shall be available with KOHLER Artist Editions designs. Toilet shall be Kohler Model K-3513-_____ .

USA/Canada: 1-800-4KOHLER
(1-800-456-4537)
www.kohler.com

GABRIELLE™

Technical Information

Optional Accessories			
K-9483-L	Left-hand trip lever – non-CP	❑ PB	❑ Other_____
K-9483-R	Right-hand trip lever – non-CP	❑ PB	❑ Other_____

Fixture:	
Configuration	one-piece, elongated
Water per flush	1.6 gal (6 L) or 1.4 gal (5.3 L)
Passageway	2-1/8″ (5.4 cm)
Water area	11″ (27.9 cm) x 8-1/2″ (21.6 cm)
Water depth from rim	6″ (15.2 cm)
Seat post hole centers	5-1/2″ (14 cm)

Included components:	
Seat	K-4713
Tank cover	85407
Left-hand trip lever **OR**	1068627
Right-hand trip lever	1080378
Tank accessory pack	52265

Included components:	
Bolt cap accessory pack	52048

Installation Notes

Install this product according to the installation guide.

Will comply with the American Disabilities Act **(ADA)** when installed per the requirements of the Accessibility Guidelines, Section 604 Water Closets, of the Act, which include the installation of an open front seat.

Will comply with **CSA B651** when installed per Clause 4.3.6 of the standard.

Will comply with **OBC** Barrier Free requirements when installed per Clause 3.8.3.8 and 3.8.3.9.

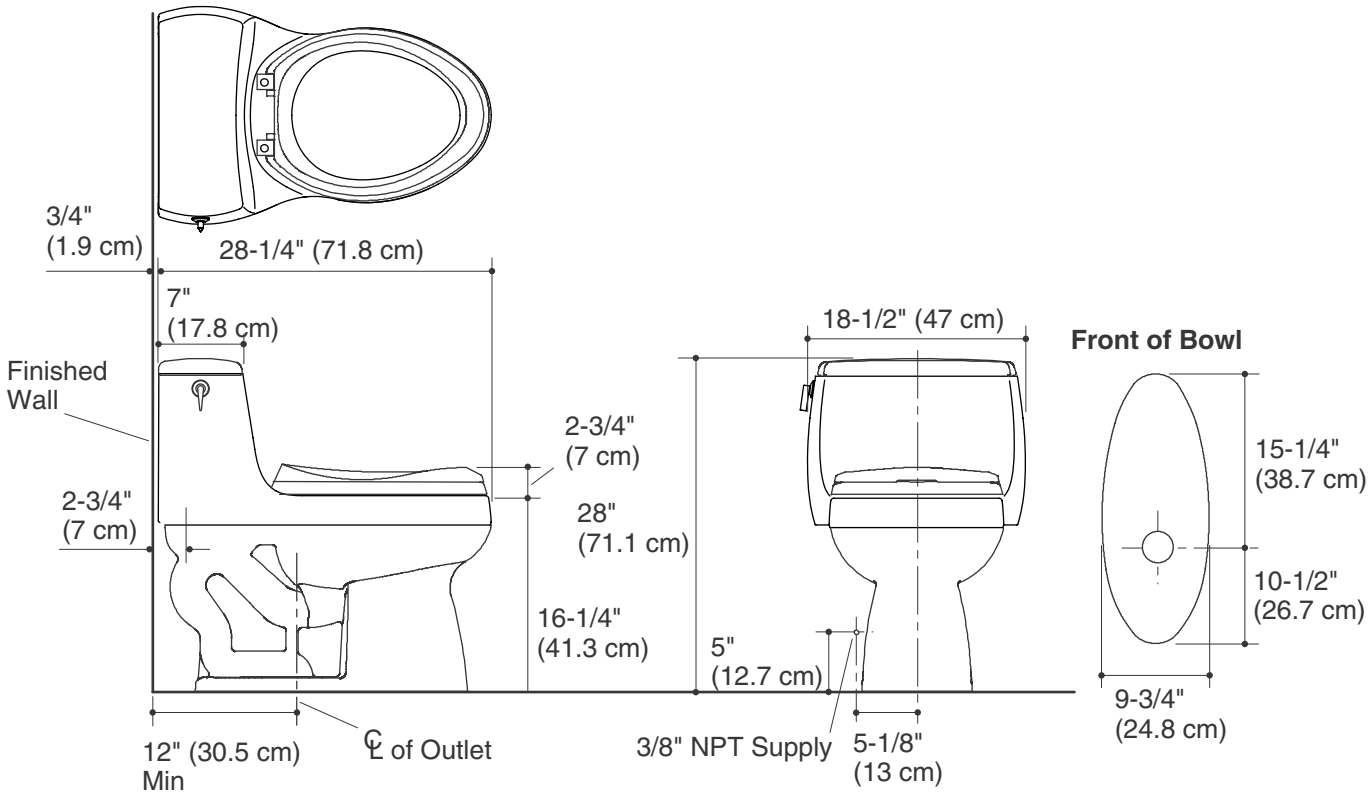

Product Diagram

THE BOLD LOOK OF KOHLER®